# DNS-P26 Series - Pressure Management Valve

Designed Network Solutions

DNS-P26 series is a pressure management valve.

1. DNS-P26M can switch two sets of pressure in six different time zones in one day. It helps to manage the pressure in different time zone when flow rate demand varies.

2. DNS-P26U can switch pressure based on high / low flow rate. The reading is from water meter with RS485.

## FEATURES

- 10 years life lithium battery
- A black control box and solenoid valve connected to the control tube system.
- Controller box can be set either by timing or flow rate thru remote controller
- IP68 for water resistance
- Comply with BS EN 1074-5, ISO 5208, BS EN 12266-1, BS EN 558-1
- DNS-P26M - 6 different time zone with 2 different pressure in one day. Each day is independent for setting.
- Both DNS-P26M & DNS-P26U types has a control box and solenoid valve on the main valve.
- DNS-P26U- has 2 flow rate setting value (lower and higher level), to switch between the 2 different setting pressure
- DNS-P26U- same main valve as DNS-P26M. The purchaser can combine either an ultrasonic or magnetic meter which can provide a RS485 signal connected to the control box.
- Single remote controller can be fitted for multiple valves setting use, no matter numbers of valves.

DNS-P26M:
Time Based

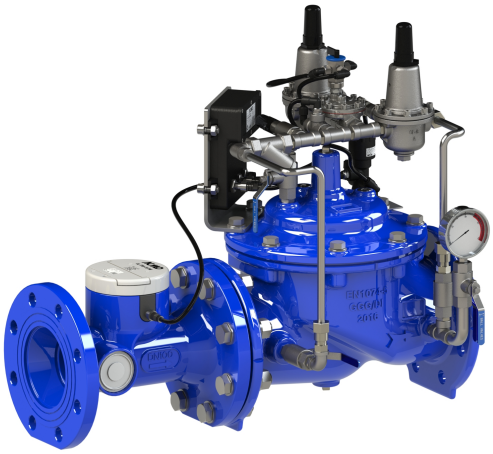

DNS-P26U:
Flow Rate Based

## Technical Data:

Size Range: DN50~DN800mm
Pressure Ratings: 10 Bar; 16 Bar; 25 Bar
Working Temperature:-10$^0$C- 80$^0$C Suitable Media: Water
End connection: PN 10 / PN 16 / PN 25
Consult Factory for other applications

Remote Controller

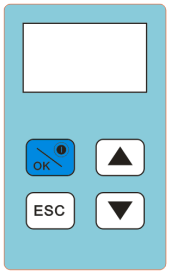


**Designed Network Solutions Ltd, 15 Buckingham Drive, Northwich, CW9 8WB**
**T 07375 385089 E craig@dns-uk-ltd.co.uk W dns-uk-ltd.co.uk**

# Main Valve
# DN50-DN350

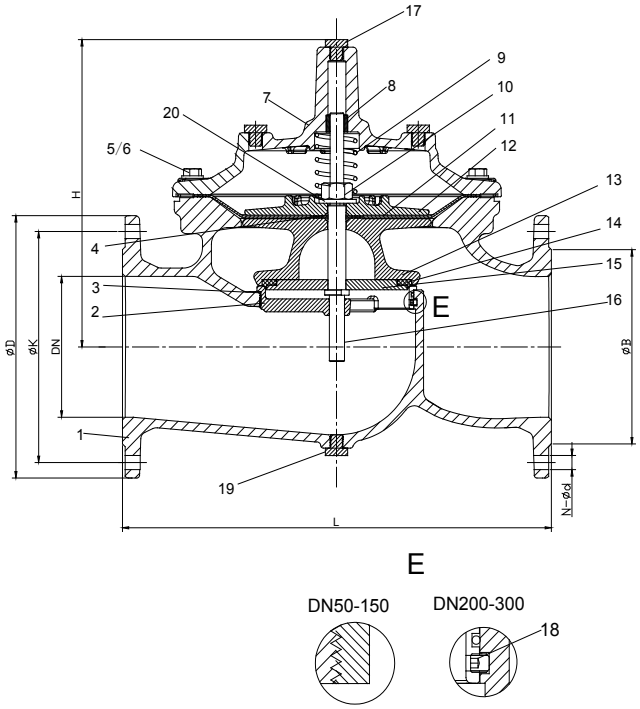


## Parts List

| No. | Description | Material | Standard |
|---|---|---|---|
| 1 | Body | Ductlie Iron | GJS 500-7 |
| 2 | Seat | Stainless Steel | AISI 304/316 |
| 3 | O-ring | Rubber | NBR |
| 4 | O-ring | Rubber | NBR |
| 5 | Bolt | Stainless Steel | A2/A4 |
| 6 | Washer | Stainless Steel | A2/A4 |
| 7 | Bonnet | Ductile Iron | GJS 500-7 |
| 8 | Bush | Bronze | C61900 |
| 9 | Spring | Stainless Steel | AISI 304/316 |
| 10 | Caulking Nut | Stainless Steel | A4 |
| 11 | Diaphragm | Nylon Reinforced Rubber | EPDM +Nylon Fabric |
| 12 | Fixing holder | Ductlie Iron | GJS 500-7 |
| 13 | Disc Holder | Ductlie Iron | GJS 500-7 |
| 14 | Seal | Rubber | EPDM |
| 15 | Seat Retainer | Stainless Steel | AISI 304/316 |
| 16 | Stem | Stainless Steel | AISI 304/316 |
| 17 | Plug | Stainless Steel | AISI 304/316 |
| 18 | Screw | Stainless Steel | A2/A4 |
| 19 | Plug | Stainless Steel | A2/A4 |
| 20 | Washer | Stainless Steel | A2/A4 |

## Dimension:

Unit：mm

| DN | Model Code | L | ØD | | | ØK | | | H | N-Ød | | | ØB | | |
|---|---|---|---|---|---|---|---|---|---|---|---|---|---|---|---|
| | | | PN10 | PN16 | PN25 | PN10 | PN16 | PN25 | | PN10 | PN16 | PN25 | PN10 | PN16 | PN25 |
| 50 | A900-0050 | 230 | 165 | 165 | 165 | 125 | 125 | 125 | 177 | 4-Ø19 | 4-Ø19 | 4-Ø19 | Ø99 | Ø99 | Ø99 |
| 65 | A900-0065 | 290 | 185 | 185 | 185 | 145 | 145 | 145 | 202 | 4-Ø19 | 4-Ø19 | 8-Ø19 | Ø118 | Ø118 | Ø118 |
| 80 | A900-0080 | 310 | 200 | 200 | 200 | 160 | 160 | 160 | 219 | 8-Ø19 | 8-Ø19 | 8-Ø19 | Ø132 | Ø132 | Ø132 |
| 100 | A900-0100 | 350 | 220 | 220 | 235 | 180 | 180 | 190 | 243 | 8-Ø19 | 8-Ø19 | 8-Ø23 | Ø156 | Ø156 | Ø156 |
| *125 | A900-0125 | 400 | 250 | 250 | 270 | 210 | 210 | 220 | 243 | 8-Ø19 | 8-Ø19 | 8-Ø28 | Ø156 | Ø156 | Ø156 |
| 150 | A900-0150 | 480 | 285 | 285 | 300 | 240 | 240 | 250 | 333 | 8-Ø23 | 8-Ø23 | 8-Ø28 | Ø211 | Ø211 | Ø211 |
| 200 | A900-0200 | 600 | 340 | 340 | 360 | 295 | 295 | 310 | 428 | 8-Ø23 | 12-Ø23 | 12-Ø28 | Ø266 | Ø266 | Ø274 |
| 250 | A900-0250 | 730 | 405 | 405 | 425 | 350 | 355 | 370 | 478 | 12-Ø23 | 12-Ø28 | 12-Ø31 | Ø319 | Ø319 | Ø330 |
| 300 | A900-0300 | 850 | 460 | 460 | 485 | 400 | 410 | 430 | 538 | 12-Ø23 | 12-Ø28 | 16-Ø31 | Ø370 | Ø370 | Ø389 |
| *350 | A900-0350 | 980 | 520 | 520 | 555 | 460 | 470 | 490 | 550 | 16-Ø23 | 16-Ø28 | 16-Ø34 | Ø429 | Ø429 | Ø448 |

NOTE：1. *DN125/350 use same internal as DN100/300
2. AISI 304 factory standard material. consult factory for AISI 316 material.

**Designed Network Solutions Ltd, 15 Buckingham Drive, Northwich, CW9 8WB**
**T 07375 385089 E craig@dns-uk-ltd.co.uk W dns-uk-ltd.co.uk**

# Main Valve
# DN400-DN800

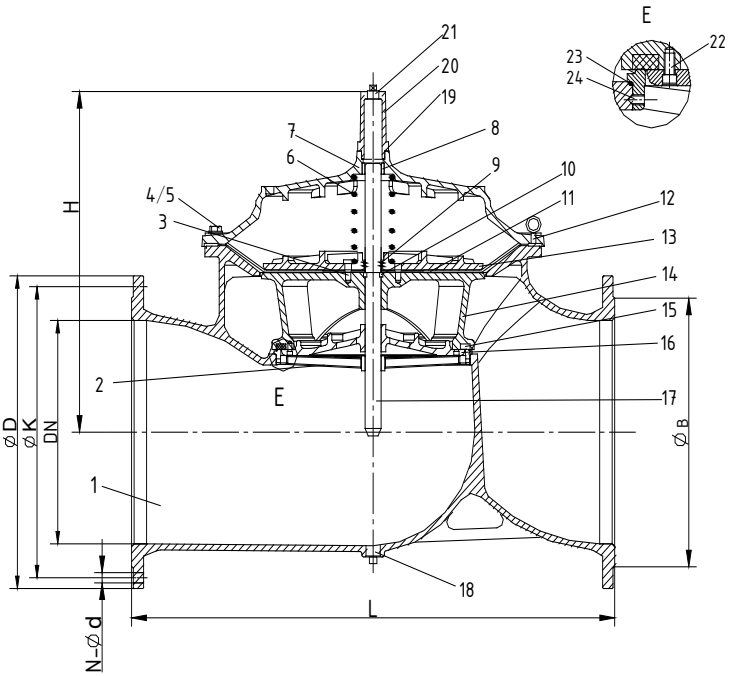


## Parts List

| No. | Description | Material | Standard |
|---|---|---|---|
| 1 | Body | Ductlie Iron | GJS 500-7 |
| 2 | Seat | Stainless Steel | AISI 304/316 |
| 3 | Screw | Stainless Steel | A2/A4 |
| 4 | Screw | Stainless Steel | A2/A4 |
| 5 | Screw | Stainless Steel | A2/A4 |
| 6 | Spring | Stainless Steel | AISI 304/316 |
| 7 | Bonnet | Ductile Iron | GJS 500-7 |
| 8 | Bush | Bronze | C61900 |
| 9 | O-ring | Rubber | NBR |
| 10 | Fix Washer | Bronze | C61900 |
| 11 | Diaphragm | Nylon Reinforced Rubber | EPDM +Nylon Fabric |
| 12 | Eye Bolts | Carbon Steel | 1040 |
| 13 | Fixing Holder | Ductlie Iron | GJS 500-7 |
| 14 | Disc Holder | Ductlie Iron | GJS 500-7 |
| 15 | Seal | Rubber | EPDM |
| 16 | Seal Retainer | Ductile Iron | GJS 500-7 |
| 17 | Stem | Stainless Steel | AISI 304/316 |
| 18 | Plug | Stainless Steel | AISI 304/316 |
| 19 | O-ring | Rubber | NBR |
| 20 | Cap | Ductlie Iron | GJS 500-7 |
| 21 | Plug | Stainless Steel | AISI 304/316 |
| 22 | Screw | Stainless Steel | A2/A4 |
| 23 | O-ring | Rubber | NBR |
| 24 | Screw | Stainless Steel | A2/A4 |

## Dimension:

Unit：mm

| DN | Model Code | L | H | ØD | | | ØK | | | N-Ød | | | ØB | | |
|---|---|---|---|---|---|---|---|---|---|---|---|---|---|---|---|
| | | | | PN10 | PN16 | PN25 | PN10 | PN16 | PN25 | PN10 | PN16 | PN25 | PN10 | PN16 | PN25 |
| 400 | A900-0400 | 1100 | 710 | 580 | 580 | 620 | 515 | 525 | 550 | 16-Ø28 | 16-Ø31 | 16-Ø37 | 480 | 480 | 503 |
| *450 | A900-0450 | 1200 | 720 | 640 | 640 | 670 | 565 | 585 | 600 | 20-Ø28 | 20-Ø31 | 20-Ø37 | 530 | 548 | 548 |
| 500 | A900-0500 | 1250 | 822 | 715 | 715 | 730 | 620 | 650 | 660 | 20-Ø28 | 20-Ø34 | 20-Ø37 | 582 | 609 | 609 |
| 600 | A900-0600 | 1450 | 885 | 840 | 840 | 845 | 725 | 770 | 770 | 20-Ø31 | 20-Ø37 | 20-Ø40 | 682 | 720 | 720 |
| *700 | A900-0700 | 1650 | 910 | 910 | 910 | 960 | 840 | 840 | 875 | 24-Ø31 | 24-Ø37 | 24-Ø43 | 682 | 720 | 720 |
| 800 | A900-0800 | 1850 | 1260 | 1025 | 1025 | 1085 | 950 | 950 | 990 | 24-Ø34 | 24-Ø40 | 24-Ø49 | 901 | 901 | 928 |

Note：1. *DN450/700 use same internal as DN400/600.
2. AISI 304 factory standard material. consult factory for AISI 316 material.

**Designed Network Solutions Ltd, 15 Buckingham Drive, Northwich, CW9 8WB**
**T 07375 385089 E craig@dns-uk-ltd.co.uk W dns-uk-ltd.co.uk**

# Pressure management advantage

Lower down the pressure based on time or flow rate are allowable to management the water distribution system

It helps to reduce the leakage rate in distribution system.

Upstream pressure

Flow rate – user demand

Downstream pressure

## Head Loss Curve

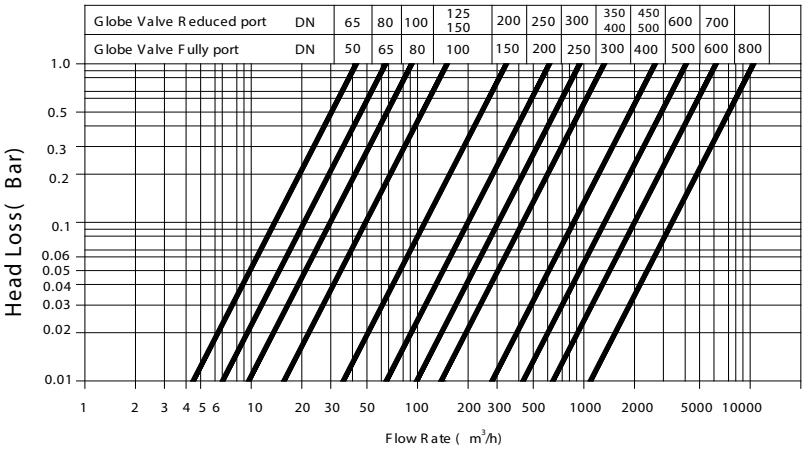


## Cavitation

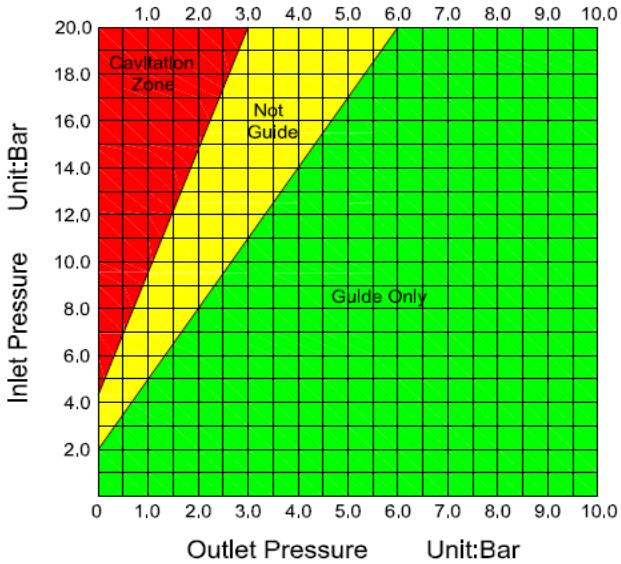


**Designed Network Solutions Ltd, 15 Buckingham Drive, Northwich, CW9 8WB**
**T 07375 385089 E craig@dns-uk-ltd.co.uk W dns-uk-ltd.co.uk**